PHOTO SIMULATION

NO SCALE

DATE: 9-15-2008

DRAWN BY: SMJ - SALT LAKE DIGITAL, INC.

MIKE HANSEN

FILE: T-MOBILE/WEST_LAKE_JHS

REVISIONS

DATE	DESCRIPTION	INITIALS
9-15-08	ZONING DRAWINGS	SMJ
11-11-08	NEW SITE LOCATION	SMJ

NOT VALID UNLESS SIGNED

LAND DESIGN & DEVELOPMENT LLC

Land Design & Development, LLC
121 W ELECTION ROAD
DRAPER, UT 84020

SALT LAKE DIGITAL, INC.
12089 S 300 E
DRAPER, UT 84020
801-856-1504

SITE NUMBER:

SL01699-A

WEST LAKE JUNIOR HIGH
3400 S 3450 W
WEST VALLEY CITY, UT 84119

A6

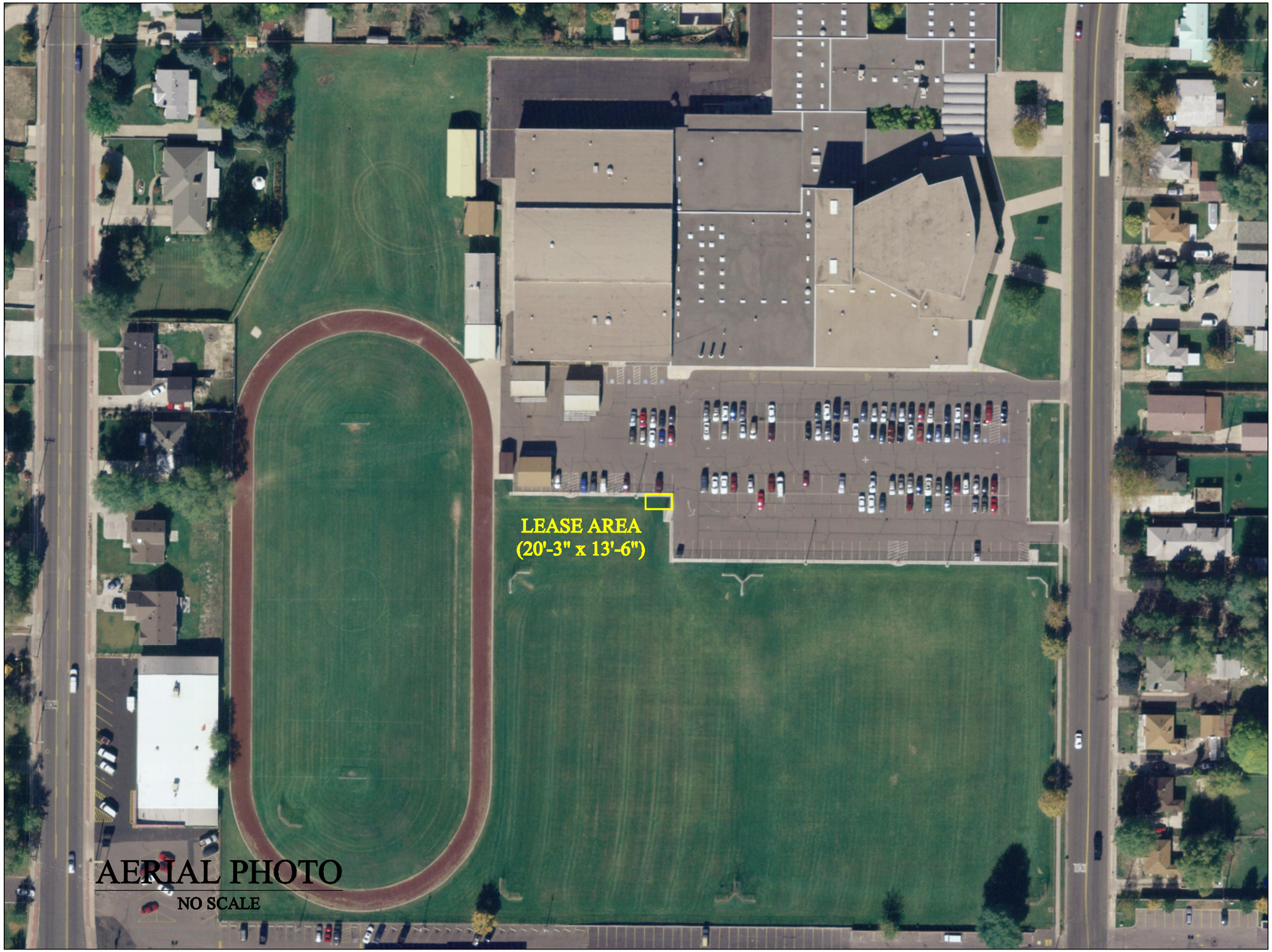

AERIAL PHOTO

NO SCALE

DATE: 9-15-2008

DRAWN BY: SMJ - SALT LAKE DIGITAL, INC.

MIKE HANSEN

FILE: T-MOBILE/WEST_LAKE_JHS

REVISIONS

DATE	DESCRIPTION	INITIALS
9-15-08	ZONING DRAWINGS	SMJ
11-11-08	NEW SITE LOCATION	SMJ

NOT VALID UNLESS SIGNED

LAND DESIGN & DEVELOPMENT LLC

Land Design & Development, LLC
121 W ELECTION ROAD
DRAPER, UT 84020

SALT LAKE DIGITAL, INC.
12089 S 300 E
DRAPER, UT 84020
801-856-1504

SITE NUMBER:

SL01699-A

WEST LAKE JUNIOR HIGH
3400 S 3450 W
WEST VALLEY CITY, UT 84119

A7

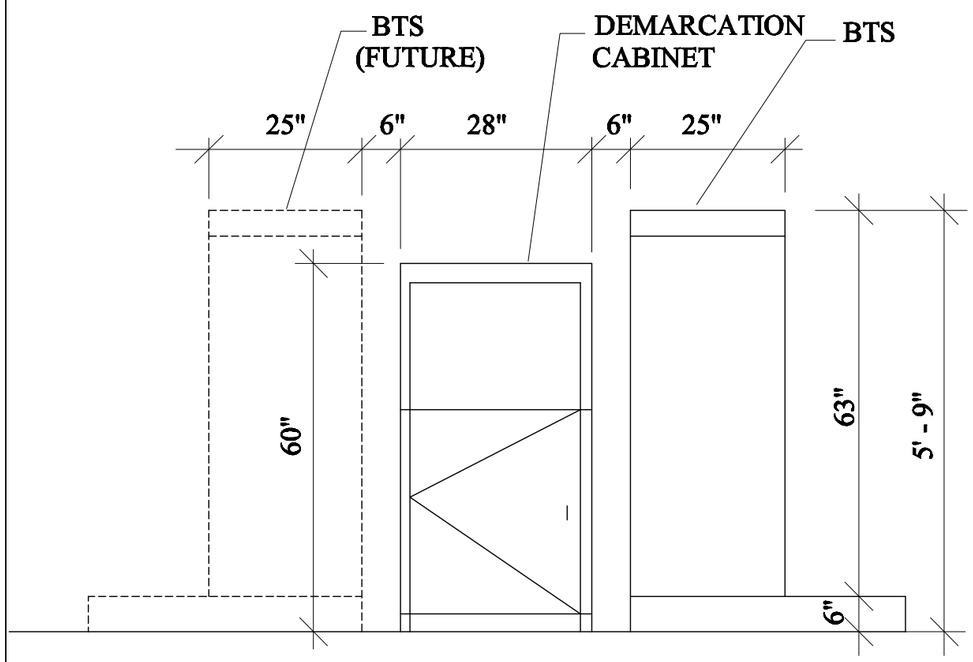

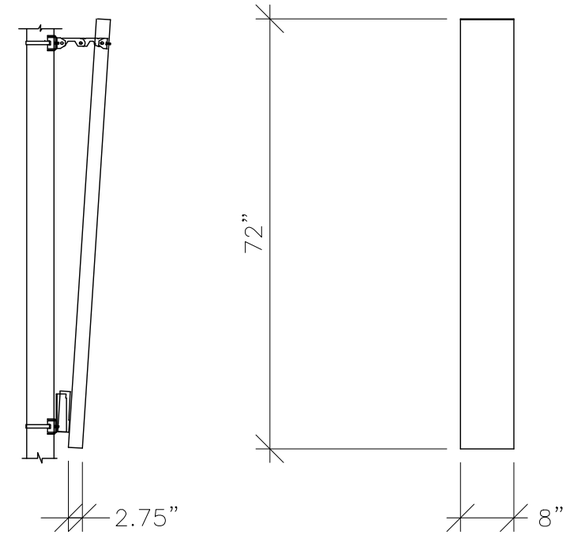

12 - FLAT PANEL PCS DIRECTIONAL ANTENNAS

FREQUENCY:1850-1990 MHz
WEIGHT: 23 LBS.
WIND SURVIVAL: 150 MPH

S8000 CABINET SPECIFICATIONS

HEIGHT	63 in (1.6 m)
WIDTH	53 in (1.35 m)
DEPTH	25 in (.65 m)
MAXIMUM WEIGHT	1058 lb (480 KG)
FOOTPRINT	1.80 M^2
EMPTY WEIGHT	326.2 lb (148 kg)
VOLTAGE	240 V +/- 10%
MAX. POWER (240V)	6500 W
NORMAL POWER	3238 W
MAIN CIRCUIT PROTECTION	70 A
MAX. HEAT DISSIPATION	22100 BTU/HOUR
NORMAL HEAT DISSIPATION	11006 BTU/HOUR
OPERATING TEMPERATURE	-40˚ to 122˚F (-40˚ to 50˚C)
MAXIMUM OPERATING HUMIDITY	100%
MAX LEVEL OF ACOUSTIC NOISE	65 DB
GROUND CABLE	2/0
ANTENNA CONNECTORS	
CABINET OUTPUT	40.3 DBM
RECEIVE SENSITIVITY	-108 DBM
OUTPUT POWER AT CABINET ANTENNA CONNECTOR (H2D)	38.0 DBM

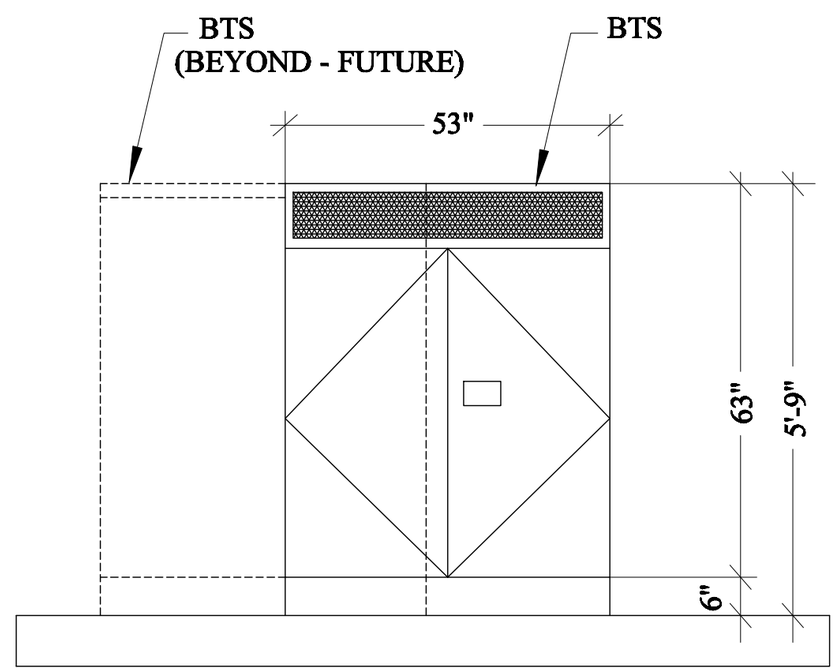

DATE: 9-15-2008
DRAWN BY: SMJ - SALT LAKE DIGITAL, INC.
MIKE HANSEN
FILE: T-MOBILE/WEST_LAKE_JHS

REVISIONS

DATE	DESCRIPTION	INITIALS
9-15-08	ZONING DRAWINGS	SMJ
11-11-08	NEW SITE LOCATION	SMJ

NOT VALID UNLESS SIGNED

LAND DESIGN & DEVELOPMENT LLC

Land Design & Development, LLC
121 W ELECTION ROAD
DRAPER, UT 84020

SALT LAKE DIGITAL, INC.
12089 S 300 E
DRAPER, UT 84020
801-856-1504

SITE NUMBER:
SL01699-A
WEST LAKE JUNIOR HIGH
3400 S 3450 W
WEST VALLEY CITY, UT 84119

A8